RAFAEL
SMART AND TO THE POINT

MINI-SAMSON RCWS

Remote Controlled Weapon Station for a Variety of Small Arms Armament

Mini-Samson RCWS - A state-of-the-art **R**emote **C**ontrolled **W**eapon **S**tation for crew protection and target engagement. The **Mini-Samson RCWS** is suitable for any light combat platform such as wheeled/tracked vehicles and fast attack craft/patrol boats.

RAFAEL's **Mini-Samson RCWS** is suitable for integration onto a variety of existing or new fighting vehicles. It provides enhanced accuracy, under-armor operation and flexibility of location at any hatch.

Main Features

- Complete remote operation
- Day/night operation
- Closed hatch and head-out operation capability
- Electric drives and firing
- Manual emergency mode of operation
- Safety firing inhibit system
- Built-in test
- Variety of weapons
- Low silhouette
- Stabilization for gun and for sight
- Video auto tracker

Main Advantages

- Lightweight
- Improved gunner protection
- No toxic gas hazard
- Good ergonomics and habitability
- External ejection of spent cartridges and links
- Low weapon depression angles
- Firing while the vehicle is under cover
- Eye contact between the gunner and the vehicle crew
- Easy installation
- Remote control enables operational and technical flexibility
- Manual backup operation

MINI-SAMSON RCWS

Technical Data

Armament (interchangeable by the crew)

- 5.56 mm
  or 7.62 mm
  or 12.7 mm
  or 40 mm AGL
  and others

Crew

- One (option: dual control posts)

Ammunition

- 5.56 mm up to 900 rounds ready for use
- 7.62 mm up to 800 rounds ready for use
- 12.7 mm up to 400 rounds ready for use
- 40 mm AGL up to 96 rounds ready for use

Control

Traverse:

- Electrically controlled Nx360°
- High speed 1.0 rad/sec
- Low speed 0.5 mrad/sec

Elevation:

- Electrically controlled
- Elevation range: -20° to + 60°
- High speed 1.0 rad/sec
- Low speed 0.5 mrad/sec

Manual backup operation

Optics

- Day sight: Charged Coupled Device (CCD) camera
- Night sight: Thermal cooled or uncooled microbolometer camera (option: LLLTV Camera)
- Other sensors are available on customer request
- Display: LCD monitor, MFD

Weight

- Over deck assembly: 135 kg / 160 kg (depends on configuration)
- In hull assembly: 20 kg

Height Above Deck

- 540/620 mm

Power supply

- 24 VDC

Other Features

- Fire Control System (FCS)
- Weapon sensor
- Remote charging
- Ammo counter

Options:

- Slave mode
- Integration of Spike missile
- Long range observation
- "Hunter to killer" mode

DIMENSIONS IN MM-12.7 mm, HMG

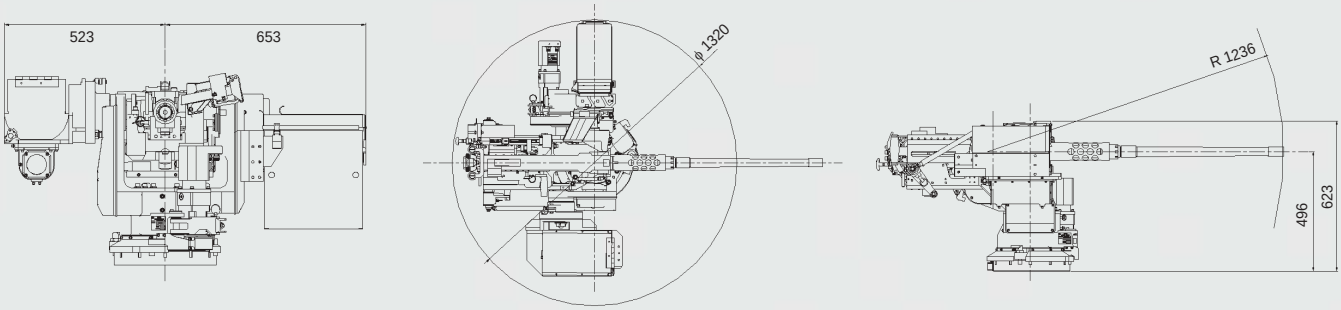

The manufacturer reserves the right to introduce technical changes without prior notice

RAFAEL
ARMAMENT DEVELOPMENT AUTHORITY Ltd.
SYSTEMS DIVISION

Tel: (972) 4-879-2002, Fax: (972) 4-879-4093
E-mail: esdmrkt@rafael.co.il

H.Q. Tel: (972) 4-879-4714, Fax: (972) 4-879-4657
E-mail: intl-mkt@rafael.co.il **Visit our site: www.rafael.co.il**

80/015/02-8/020118/37UNC.RAFAEL Graphic Design dept./Meira s.